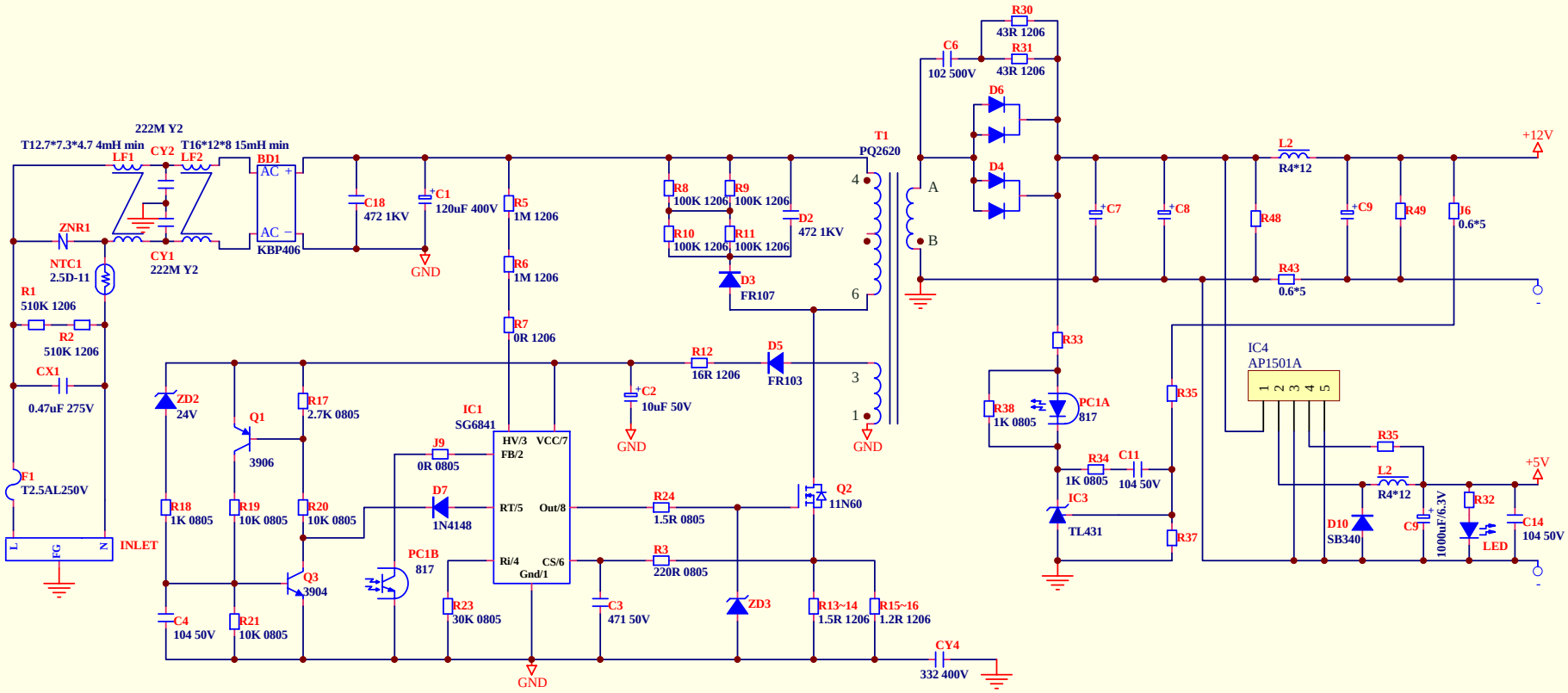

Title		
Size A4	Number	Revision
Date: 18-Sep-2010	Sheet of	
File: D:\power\Design model\Project\Adapter\FLD0516-B\HK60\60W\PCB\HKC-60W SCH.Ddb	Drawn By:	